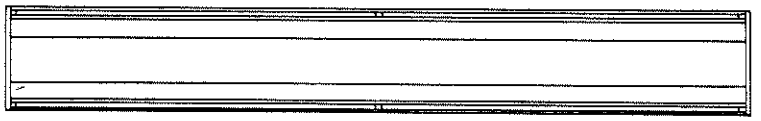

PLAN OF FEEDER

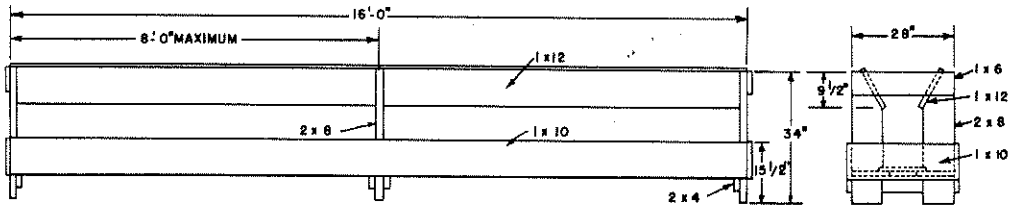

FRONT ELEVATION

END ELEVATION

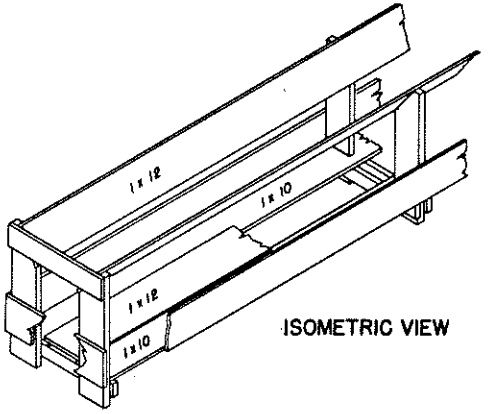

ISOMETRIC VIEW

DETAILS OF FEEDER

0 1 2 3 FT.

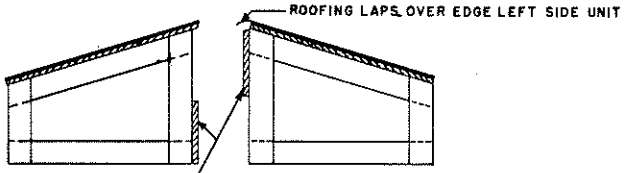

NOTE: CONSTRUCTION OF THE RIGHT SIDE UNIT AND THE LEFT SIDE UNIT DIFFERS SLIGHTLY

CROSS SECTION OF SHELTERS

0 1 2 FT.

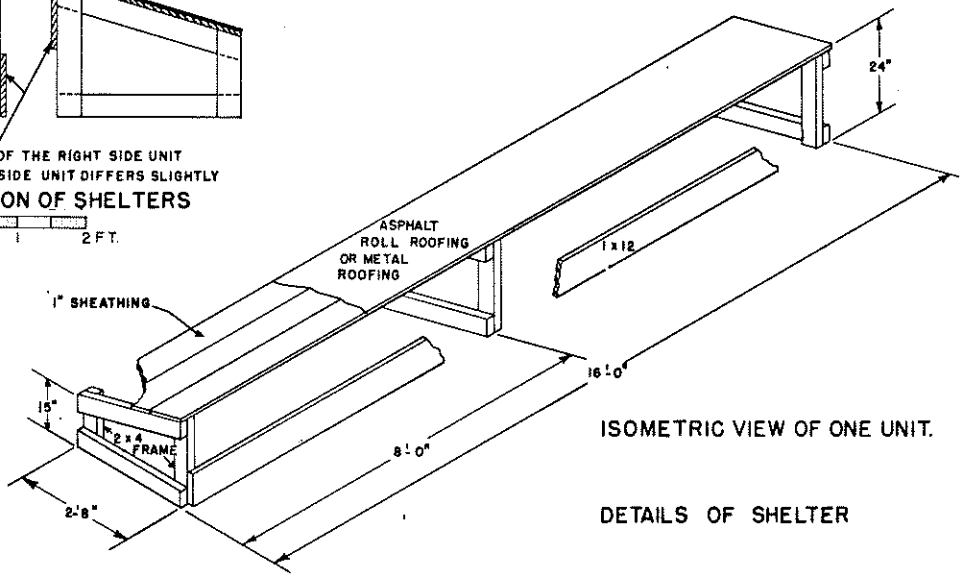

ISOMETRIC VIEW OF ONE UNIT.

DETAILS OF SHELTER

NOTE:

THIS FEEDER CAN BE MADE IN 12 AND 14 FOOT LENGTHS. THE SHORTER LENGTHS ARE MUCH STRONGER BECAUSE THE DISTANCE BETWEEN SUPPORTS IS LESS.

THIS FEEDER MAY BE USED AS A DIVIDER BETWEEN PENS BY ADDING A 1 x 6 BOARD IN THE CENTER TO PREVENT THE SHEEP FROM CRAWLING THROUGH.

DIMENSIONS OF MEMBERS SHOWN ARE BASED ON THE USE OF DRESSED LUMBER.

ALL WOOD IN CONTACT WITH THE GROUND TO BE TREATED WITH A NON-TOXIC PRESERVATIVE.

COOPERATIVE EXTENSION WORK IN
AGRICULTURE AND HOME ECONOMICS
DEPARTMENT OF AGRICULTURAL ENGINEERING
UNIVERSITY OF MARYLAND
AND
UNITED STATES DEPARTMENT OF AGRICULTURE COOPERATING

SHEEP EQUIPMENT

UTAH '60	EX. 5905	SHEET 1 OF 1

SHEEP